Global LCD Panel Exchange Center www.panelook.com 屏库:全球液晶屏交易中心

TENTATIVE

All information in this technical data sheet is tentative and subject to change without notice.

15.0”XGA

TECHNICAL SPECIFICATION

AA150XC04

MITSUBISHI ELECTRIC Corp.

Date: Aug.17, ’04

One step solution for LCD / PDP / OLED panel application: Datasheet, inventory and accessory! www.panelook.com

Global LCD Panel Exchange Center www.panelook.com 屏库:全球液晶屏交易中心

CONTENTS

No.	Item	Page
--	COVER	1
--	CONTENTS	2
1	APPLICATION	3
2	OVERVIEW	4
3	ABSOLUTE MAXIMUM RATINGS	5
4	ELECTRICAL CHARACTERISTICS	5, 6, 7
5	INTERFACE PIN CONNECTION	8, 9
6	INTERFACE TIMING	10, 11, 12, 13
7	BLOCK DIAGRAM	14
8	MECHANICAL SPECIFICATION	15, 16
9	OPTICAL CHARACTERISTICS	17, 18
10	RELIABILITY TEST CONDITION	19
11	HANDLING PRECAUTIONS FOR TFT-LCD MODULE	20, 21, 22

www.panelook.com

One step solution for LCD / PDP / OLED panel application: Datasheet, inventory and accessory! www.panelook.com

Global LCD Panel Exchange Center www.panelook.com 屏库:全球液晶屏交易中心

1. APPLICATION

This specification applies to color TFT-LCD module, AA150XC04.

These specification papers are the proprietary product of Mitsubishi Electric Corporation (“MITSUBISHI) and include materials protected under copyright of MITSUBISHI. No part of this document may be reproduced in any form or by any means without the express written permission of MITSUBISHI.

MITSUBISHI does not assume any liability for infringement of patents, copyrights or other intellectual property rights of third parties by or arising from use of a product specified in this document. No license, express, implied or otherwise, is granted under any patents, copyrights or other intellectual property rights of MITSUBISHI or of others.

MITSUBISHI classifies the usage of the TFT-LCD module as follows. Please confirm the usage before using the product.

(1) Standard Usage

Computers, office equipment, factory automation equipment, test and measurement equipment, communications, transportation equipment(automobiles, ships, trains, etc.), provided, however, that operation is not influenced by TFT-LCD directly.

(2) Special Usage

Medical equipment, safety equipment, transportation equipment, provided, however, that TFT-LCD is necessary to its operation.

(3) Specific Usage

Cockpit Equipment, military systems, aerospace equipment, nuclear reactor control systems, life support systems and any other equipment. MITSUBISHI should make a contract that stipulate apportionment of responsibilities between MITSUBISHI and our customer.

The product specified in this document is designed for “Standard Usage” unless otherwise specified in this document. If customers intend to use the product for applications other than those specified for “Standard Usage”, they should contact MITSUBISHI sales representative in advance.

MITSUBISHI has been making continuous effort to improve the reliability of its products. Customers should implement sufficient reliability design of their application equipments such as redundant system design, fail-safe functions, anti-failure features.

MITSUBISHI assumes no responsibility for any damage resulting from the use of the product that does not comply with the instructions and the precautions specified in this document.

Please contact and consult a MITSUBISHI sales representative for any questions regarding this product.

One step solution for LCD / PDP / OLED panel application: Datasheet, inventory and accessory! www.panelook.com

2. OVERVIEW

AA150XC04 is 15.0” color TFT-LCD (Thin Film Transistor Liquid Crystal Display) modules composed of LCD panel, driver ICs, control circuit, and backlight unit.

By applying 8bit digital data, 1024 × 768, 16.7M-color images are displayed on the 15.0” diagonal screen. Input power voltages are 5.0 V for LCD driving.

The type of data and control signals are digital, and 2 pixel data are transmitted per Typ. 32.5 MHz clock cycle.

General specifications are summarized in the following table:

ITEM	SPECIFICATION
Display Area (mm)	304.1 (H) × 228.1 (V) (15.0-inch diagonal)
Number of Dots	1024 × 3 (H) × 768 (V)
Pixel Pitch (mm)	0.297 (H) × 0.297 (V)
Color Pixel Arrangement	RGB vertical stripe
Display Mode	Normally white TN
Number of Color	16.7 M(8 bits/color)
Brightness	350 cd/m^2 (Typ.)
Wide Viewing Angle Technology	Optical Compensation Film
Viewing Angle (CR ≥ 10)	-85~85° (H) -80~70° (V)
Surface Treatment	Low-reflection and hard-coating 2H
Electrical Interface	CMOS(VI = 3~5 V, 2 pixel / clock)
Optimum Viewing Angle(Contrast ratio)	6 o’clock
Module Size (mm)	326.0 (W) × 255.0 (H) × 15.5 (D)
Module Mass (g)	1350
Backlight Unit	CCFL, 4-tubes, edge-light, replaceable

Characteristic value without any note is typical value.

www.panelook.com

One step solution for LCD / PDP / OLED panel application: Datasheet, inventory and accessory! www.panelook.com

Global LCD Panel Exchange Center www.panelook.com 屏库:全球液晶屏交易中心

3. ABSOLUTE MAXIMUM RATINGS

ITEM	SYMBOL	MIN.	MAX.	UNIT
Power Supply Voltage for LCD	VCC	0	7.0	V
Logic Input Voltage	VI	-0.5	6.1	V
Lamp Voltage	VL	0	2500	Vrms
Lamp Current	IL	0	10.0	mArms
Lamp Frequency	FL	--	100	kHz
Operation Temperature(Panel) Note 1,2)	$T_{op(Panel)}$	0	50	°C
Operation Temperature(Ambient) Note 2)	$T_{op(Ambient)}$	0	50	°C
Storage Temperature Note 2)	T_{stg}	-20	60	°C

[Note]

1) Measured at the center of active area and at the center of panel back surface

2) Top,Tstg ≤ 40°C : 90%RH max. without condensation

Top,Tstg > 40°C : Absolute humidity shall be less than the value of 90%RH at 40°C without condensation

4. ELECTRICAL CHARACTERISTICS

(1) TFT- LCD

Ambient Temperature : Ta = 25°C

ITEM		SYMBOL	MIN.	TYP.	MAX.	UNIT	Remarks
Power Supply Voltages for LCD		VCC	4.5	5.0	5.5	V	*1)
Power Supply Currents for LCD		ICC	--	300	500	mA	*2)
Permissive Input Ripple Voltage		VRP	--	--	100	mVp-p	VCC = +5.0 V
Logic Input Voltage	High	VIH	2.2	3.3	5.5	V	
	Low	VIL	0	--	0.8	V	

*1) Power and signals sequence:

t1 ≤ 10 ms
0 < t2 ≤ 10 ms
0 < t3 ≤ 1 s
0 < t4 ≤ 50 ms
1 s ≤ t5
200 ms ≤ t6
0 ≤ t7

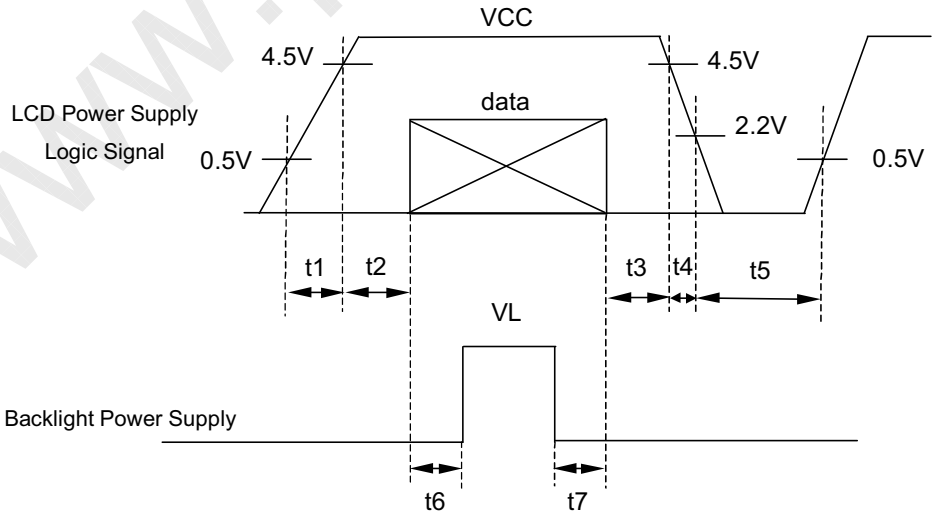

Data: RGB DATA, DCLK, HD, VD, DENA

One step solution for LCD / PDP / OLED panel application: Datasheet, inventory and accessory! www.panelook.com

VCC-dip conditions:

1) When VCCMIN ≥ 3.6 V, td ≤ 10 ms
2) When VCCMIN < 3.6 V
   VCC-dip conditions should also follow the power and signals sequence.

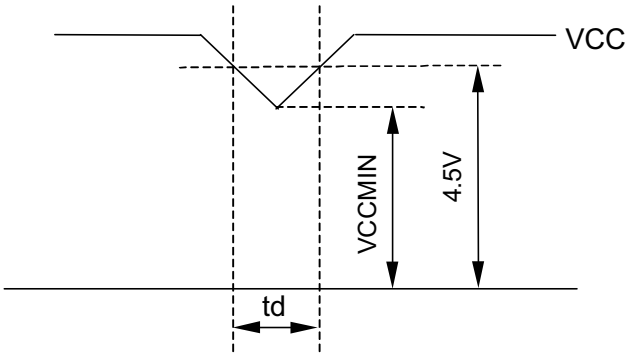

*2) Typical current condition:
256- gray- bar-pattern
768 line mode
VCC = 5.0 V, f_H = 48.4 kHz, f_V = 60 Hz, f_{CLK} = 32.5 MHz

(2) Backlight Ta = 25°C

ITEM	SYMBOL	MIN.	TYP.	MAX.	UNIT	Remarks
Lamp Voltage	VL	--	620	--	Vrms	IL = 6.5 mArms
Lamp Current	IL	3.5	6.5	8.0	mArms	*1)*4)
Lamp Frequency	FL	40	--	70	kHz	*2)
Starting Lamp Voltage	VS	1500	--	--	Vrms	Ta = 0°C
		1300	--	--	Vrms	Ta = 25°C
Lamp Life Time	LT	50000	--	--	h	*3), IL = 6.5 mArms, Continuous Operation

*1) Lamp Current measurement method (The current meter is inserted in low voltage line.)

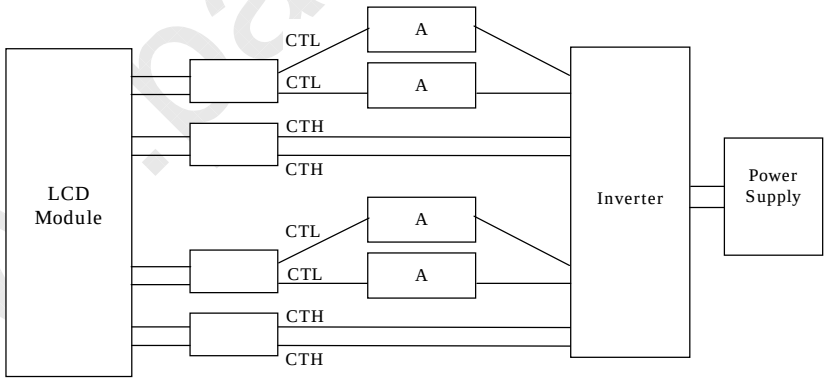

*2) Lamp frequency of inverter may produce interference with horizontal synchronous frequency, and this may cause horizontal beat on the display. Therefore, please adjust lamp frequency, and keep inverter as far from module as possible or use electronic shielding between inverter and module to avoid the interference.

*3) Lamp life time is defined as the time either when the brightness becomes 50% of the initial value, or when the starting lamp voltage does not meet the value specified in this table.

One step solution for LCD / PDP / OLED panel application: Datasheet, inventory and accessory! www.panelook.com

*4) Please use the inverter which has symmetrical current wave form as follows,

The degree of unbalance: less than 10%

The ratio of wave height: less than $\sqrt{2}$ ±10%

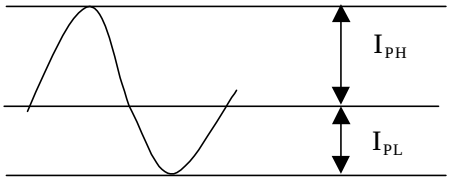

I_{PH}: High side peak

I_{PL}: Low side peak

The degree of unbalance = $|I_{PH} - I_{PL}| / Irms \times 100(\%)$

The ratio of wave height = I_{PH}(or I_{PL}) / Irms

CURRENT WAVE FORM

www.panelook.com

One step solution for LCD / PDP / OLED panel application: Datasheet, inventory and accessory! www.panelook.com

Global LCD Panel Exchange Center www.panelook.com 屏库:全球液晶屏交易中心

5. INTERFACE PIN CONNECTION

(1)CN 1(Data Signal and Power Supply)

Used Connector: IL-FHR-BF40S-HF (JAE)

Pin No.	Symbol	Function
1	GND	
2	VCC	
3	VCC	
4	RO0	Red odd data(LSB)
5	RO1	Red odd data
6	RO2	Red odd data
7	RO3	Red odd data
8	GND	
9	RO4	Red odd data
10	RO5	Red odd data
11	RO6	Red odd data
12	RO7	Red odd data(MSB)
13	GND	
14	GO0	Green odd data(LSB)
15	GO1	Green odd data
16	GO2	Green odd data
17	GO3	Green odd data
18	GND	
19	GO4	Green odd data
20	GO5	Green odd data
21	GO6	Green odd data
22	GO7	Green odd data(MSB)
23	GND	
24	BO0	Blue odd data(LSB)
25	BO1	Blue odd data
26	BO2	Blue odd data
27	BO3	Blue odd data
28	GND	
29	BO4	Blue odd data
30	BO5	Blue odd data
31	BO6	Blue odd data
32	BO7	Blue odd data(MSB)
33	GND	
34	REV	Reverse scan control. L = Normal, H = Reverse
35	HD	Horizontal Sync
36	VD	Vertical Sync
37	DENA	Data enable
38	GND	
39	DCLK	Dot Clock
40	GND	

www.panelook.com

One step solution for LCD / PDP / OLED panel application: Datasheet, inventory and accessory! www.panelook.com

Global LCD Panel Exchange Center www.panelook.com 屏库:全球液晶屏交易中心

(2) CN 2 (Data signal)

Used Connector: IL-FHR-BF36S-HF (JAE)

Pin No.	Symbol	Function
1	GND	
2	TEST	This pin should be open. Test signal output for only internal test use.
3	TEST	This pin should be open. Test signal output for only internal test use.
4	TEST	This pin should be open. Test signal output for only internal test use.
5	GND	
6	GND	
7	RE0	Red even data(LSB)
8	RE1	Red even data
9	RE2	Red even data
10	RE3	Red even data
11	GND	
12	RE4	Red even data
13	RE5	Red even data
14	RE6	Red even data
15	RE7	Red even data(MSB)
16	GND	
17	GE0	Green even data(LSB)
18	GE1	Green even data
19	GE2	Green even data
20	GE3	Green even data
21	GND	
22	GE4	Green even data
23	GE5	Green even data
24	GE6	Green even data
25	GE7	Green even data(MSB)
26	GND	
27	BE0	Blue even data(LSB)
28	BE1	Blue even data
29	BE2	Blue even data
30	BE3	Blue even data
31	GND	
32	BE4	Blue even data
33	BE5	Blue even data
34	BE6	Blue even data
35	BE7	Blue even data(MSB)
36	GND	

*) The shielding case is connected with GND.

(3) CN 3, 4(Backlight)

Backlight-side connector: BHSR-02VS-1(JST)

Inverter-side connector: SM02B-BHSS-1-TB

Pin No.	Symbol	Function
1, 2	CTH	VBLH (High Voltage)

[Note] VBLH-VBLL = VL

(4) CN 5, 6(Backlight)

Backlight-side connector: BHR-02VS-1(JST)

Inverter-side connector: SM02(4.0)B-BHS-1-TB

Pin No.	Symbol	Function
1, 2	CTL	VBLL (Low Voltage)

[Note] VBLH-VBLL = VL

One step solution for LCD / PDP / OLED panel application: Datasheet, inventory and accessory! www.panelook.com

Global LCD Panel Exchange Center www.panelook.com 屏库:全球液晶屏交易中心

6. INTERFACE TIMING

(1) Timing Specifications

ITEM		SYMBOL	MIN.	TYP.	MAX.	UNIT
DCLK *1) *4)	Frequency	f_{CLK}	30	32.5	40	MHz
	Period	t_{CLK}	25.0	30.8	33.3	ns
	Low Width	t_{WCL}	8	--	--	ns
	High Width	t_{WCH}	8	--	--	ns
DATA *1) (R,G,B,DENA, HD, VD)	Set up time	t_{DS}	2.3	--	--	ns
	Hold time	t_{DH}	7.3	--	--	ns
DENA *3) *5)	Horizontal Active Time	t_{HA}	512	512	512	t_{CLK}
	Horizontal Front Porch	t_{HFP}	0	12	--	t_{CLK}
	Horizontal Back Porch	t_{HBP}	6	148	--	t_{CLK}
	Vertical Active Time	t_{VA}	768	768	768	t_H
	Vertical Front Porch	t_{VFP}	0	3	--	t_H
	Vertical Back Porch	t_{VBP}	4	35	--	t_H
HD *2)*4)	Frequency	f_H	--	48.4	62.5	kHz
	Period	t_H	16	20.7	--	µs
	Low Width	t_{WHL}	1	68	--	t_{CLK}
VD *2)	Frequency	f_V	55	60	75	Hz
	Period	t_V	13.3	16.7	18.2	ms
	Low Width	t_{WVL}	1	6	--	t_H

[Note]

*1) DATA is latched at fall edge of DCLK in this specification.
*2) Polarities of HD and VD are negative in this specification.
*3) DENA (Data Enable) should always be positive polarity as shown in the timing specification.
*4) DCLK should appear during all invalid period, and HD should appear during invalid period of frame cycle.
*5) $t_{HFP} + t_{HBP} \geq 85t_{CLK}$

www.panelook.com

One step solution for LCD / PDP / OLED panel application: Datasheet, inventory and accessory! www.panelook.com

(2) Timing Chart

a. Pixel Timing Chart

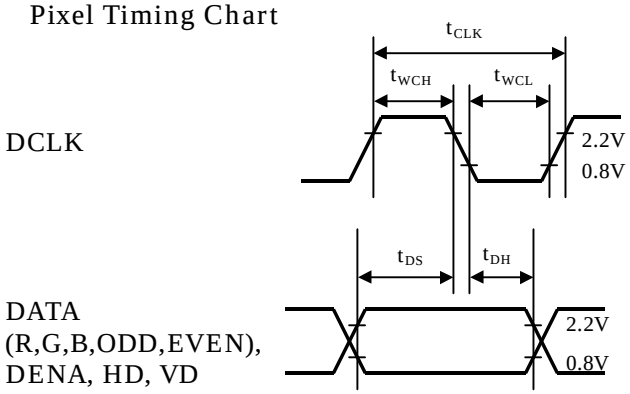

b. Horizontal Timing Chart

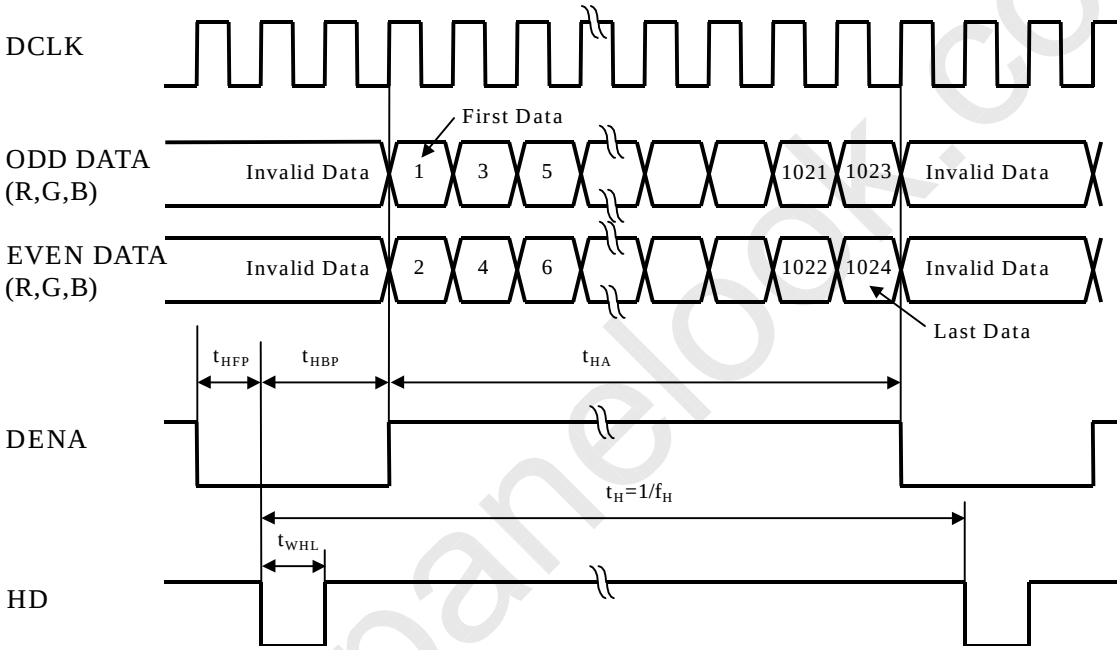

c. Vertical Timing Chart

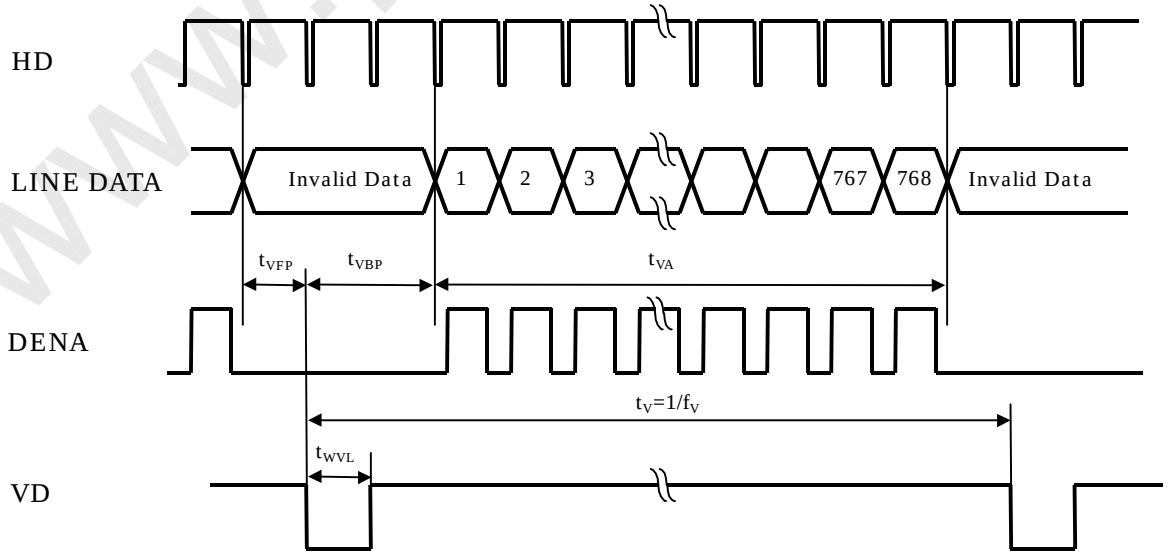

www.panelook.com

One step solution for LCD / PDP / OLED panel application: Datasheet, inventory and accessory! www.panelook.com

(3) Color Data Assignment

COLOR		INPUT DATA																							
		R DATA								G DATA								B DATA							
		R7	R6	R5	R4	R3	R2	R1	R0	G7	G6	G5	G4	G3	G2	G1	G0	B7	B6	B5	B4	B3	B2	B1	B0
		MSB							LSB	MSB							LSB	MSB							LSB
BASIC COLOR	BLACK	0	0	0	0	0	0	0	0	0	0	0	0	0	0	0	0	0	0	0	0	0	0	0	0
	RED(255)	1	1	1	1	1	1	1	1	0	0	0	0	0	0	0	0	0	0	0	0	0	0	0	0
	GREEN(255)	0	0	0	0	0	0	0	0	1	1	1	1	1	1	1	1	0	0	0	0	0	0	0	0
	BLUE(255)	0	0	0	0	0	0	0	0	0	0	0	0	0	0	0	0	1	1	1	1	1	1	1	1
	CYAN	0	0	0	0	0	0	0	0	1	1	1	1	1	1	1	1	1	1	1	1	1	1	1	1
	MAGENTA	1	1	1	1	1	1	1	1	0	0	0	0	0	0	0	0	1	1	1	1	1	1	1	1
	YELLOW	1	1	1	1	1	1	1	1	1	1	1	1	1	1	1	1	0	0	0	0	0	0	0	0
	WHITE	1	1	1	1	1	1	1	1	1	1	1	1	1	1	1	1	1	1	1	1	1	1	1	1
RED	RED(1)	0	0	0	0	0	0	0	1	0	0	0	0	0	0	0	0	0	0	0	0	0	0	0	0
	RED(2)	0	0	0	0	0	0	1	0	0	0	0	0	0	0	0	0	0	0	0	0	0	0	0	0
	RED(254)	1	1	1	1	1	1	1	0	0	0	0	0	0	0	0	0	0	0	0	0	0	0	0	0
	RED(255)	1	1	1	1	1	1	1	1	0	0	0	0	0	0	0	0	0	0	0	0	0	0	0	0
GREEN	GREEN(1)	0	0	0	0	0	0	0	0	0	0	0	0	0	0	0	1	0	0	0	0	0	0	0	0
	GREEN(2)	0	0	0	0	0	0	0	0	0	0	0	0	0	0	1	0	0	0	0	0	0	0	0	0
	GREEN(254)	0	0	0	0	0	0	0	0	1	1	1	1	1	1	1	0	0	0	0	0	0	0	0	0
	GREEN(255)	0	0	0	0	0	0	0	0	1	1	1	1	1	1	1	1	0	0	0	0	0	0	0	0
BLUE	BLUE(1)	0	0	0	0	0	0	0	0	0	0	0	0	0	0	0	0	0	0	0	0	0	0	0	1
	BLUE(2)	0	0	0	0	0	0	0	0	0	0	0	0	0	0	0	0	0	0	0	0	0	0	1	0
	BLUE(254)	0	0	0	0	0	0	0	0	0	0	0	0	0	0	0	0	1	1	1	1	1	1	1	0
	BLUE(255)	0	0	0	0	0	0	0	0	0	0	0	0	0	0	0	0	1	1	1	1	1	1	1	1

[Note]

*1) Definition of gray scale

Color (n) ---n indicates gray scale level.

Higher n means brighter level.

*2) Data

1:High, 0: Low

One step solution for LCD / PDP / OLED panel application: Datasheet, inventory and accessory! www.panelook.com

(4) Data Mapping

D(1, 1)	D(2, 1)	---	D(X, 1)	---	D(1023, 1)	D(1024, 1)
D(1, 2)	D(2, 2)	---	D(X, 2)	---	D(1023, 2)	D(1024, 2)
¦	¦	+	¦	+	¦	¦
D(1, Y)	D(2, Y)	---	D(X, Y)	---	D(1023, Y)	D(1024, Y)
¦	¦	+	¦	+	¦	¦
D(1,767)	D(2,767)	---	D(X,767)	---	D(1023,767)	D(1024,767)
D(1,768)	D(2,768)	---	D(X,768)	---	D(1023,768)	D(1024,768)

www.panelook.com

One step solution for LCD / PDP / OLED panel application: Datasheet, inventory and accessory! www.panelook.com

7. BLOCK DIAGRAM

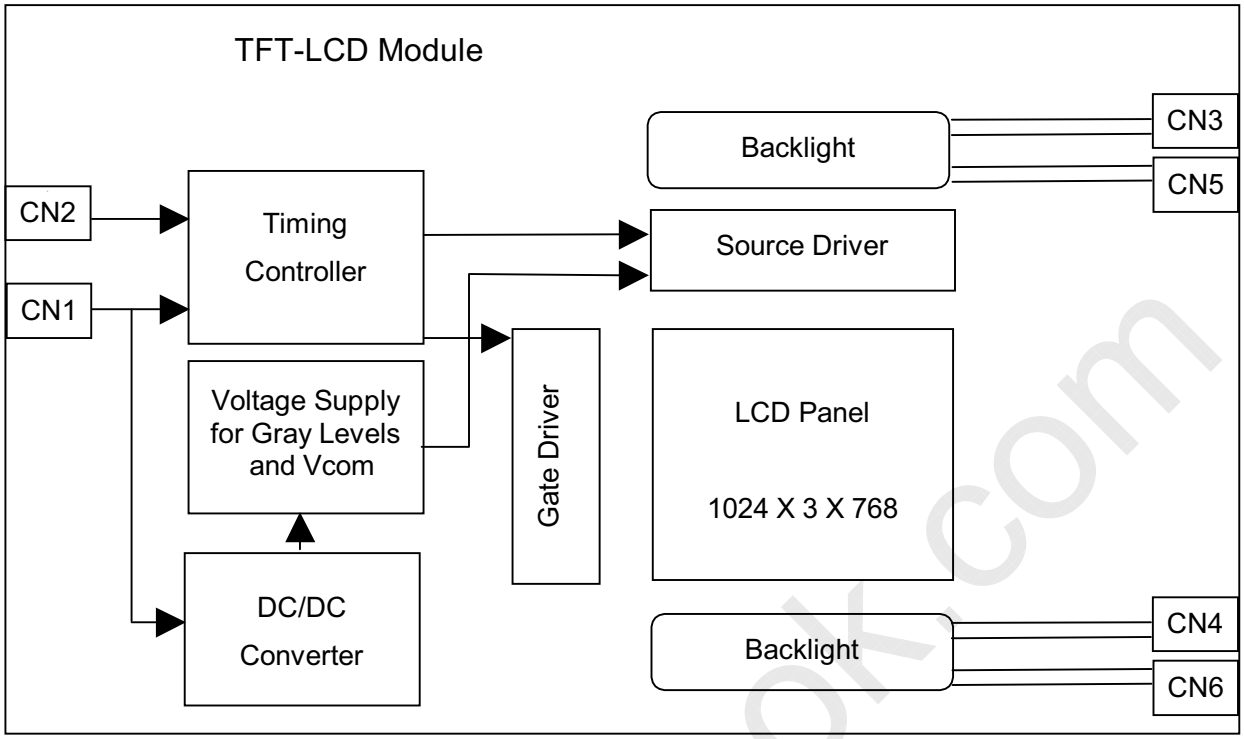

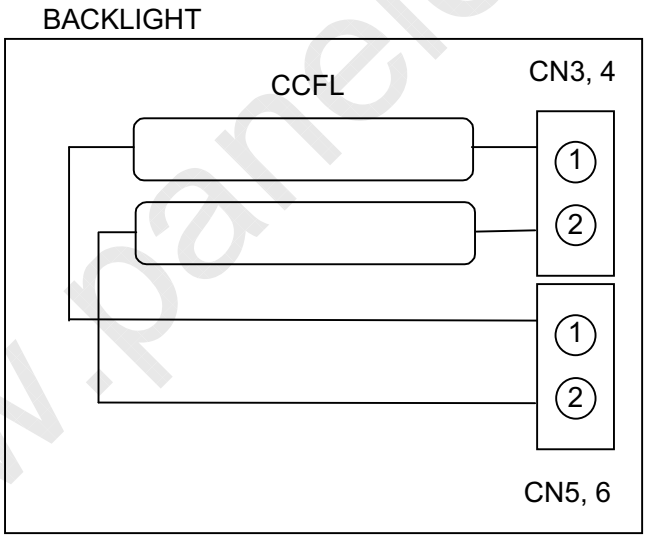

www.panelook.com

One step solution for LCD / PDP / OLED panel application: Datasheet, inventory and accessory! www.panelook.com

Global LCD Panel Exchange Center www.panelook.com 屏库:全球液晶屏交易中心

8. MECHANICAL SPECIFICATIONS

(1)Front side

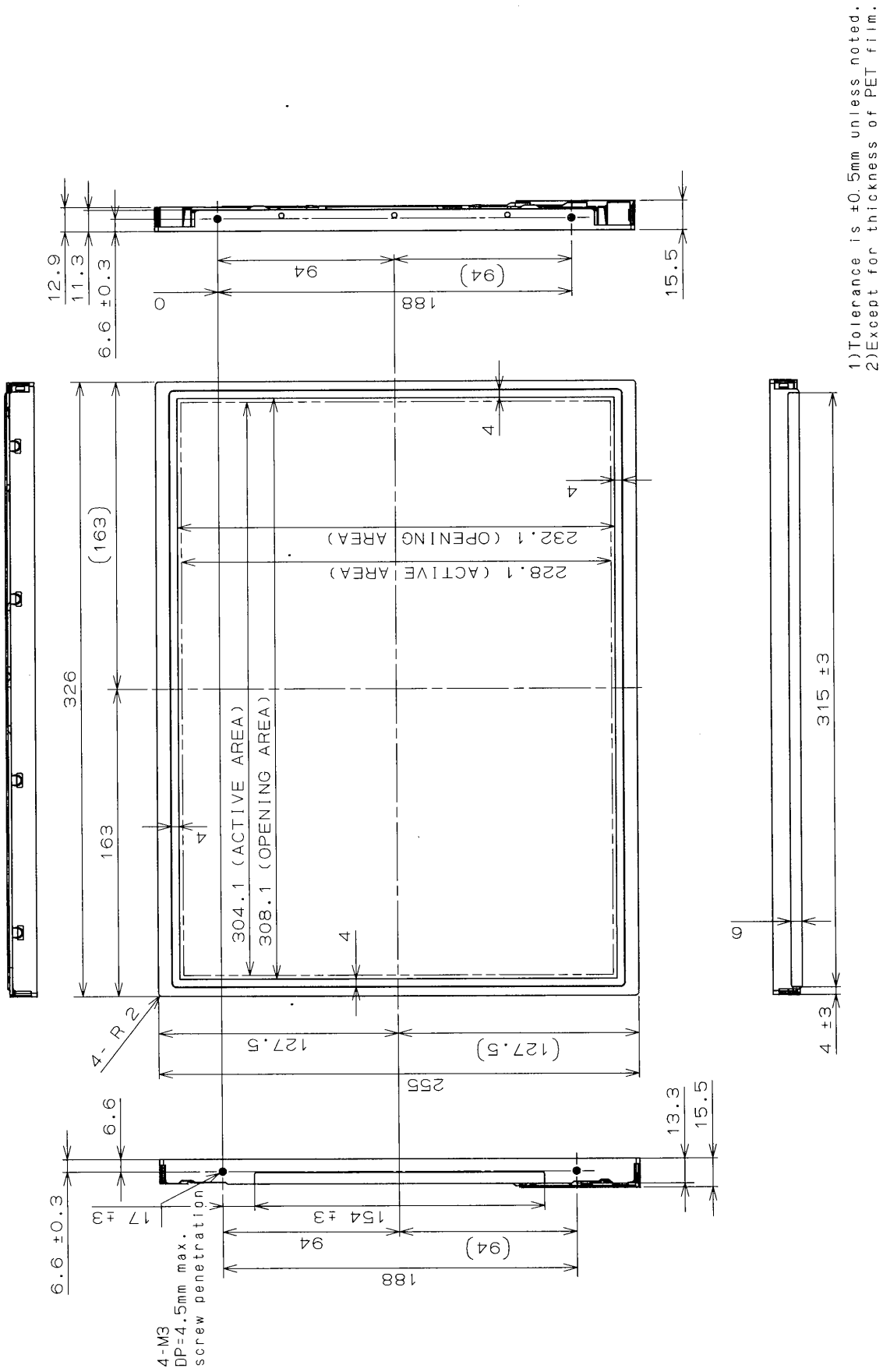

(Unit:mm)

One step solution for LCD / PDP / OLED panel application: Datasheet, inventory and accessory! www.panelook.com

(2)Rear side

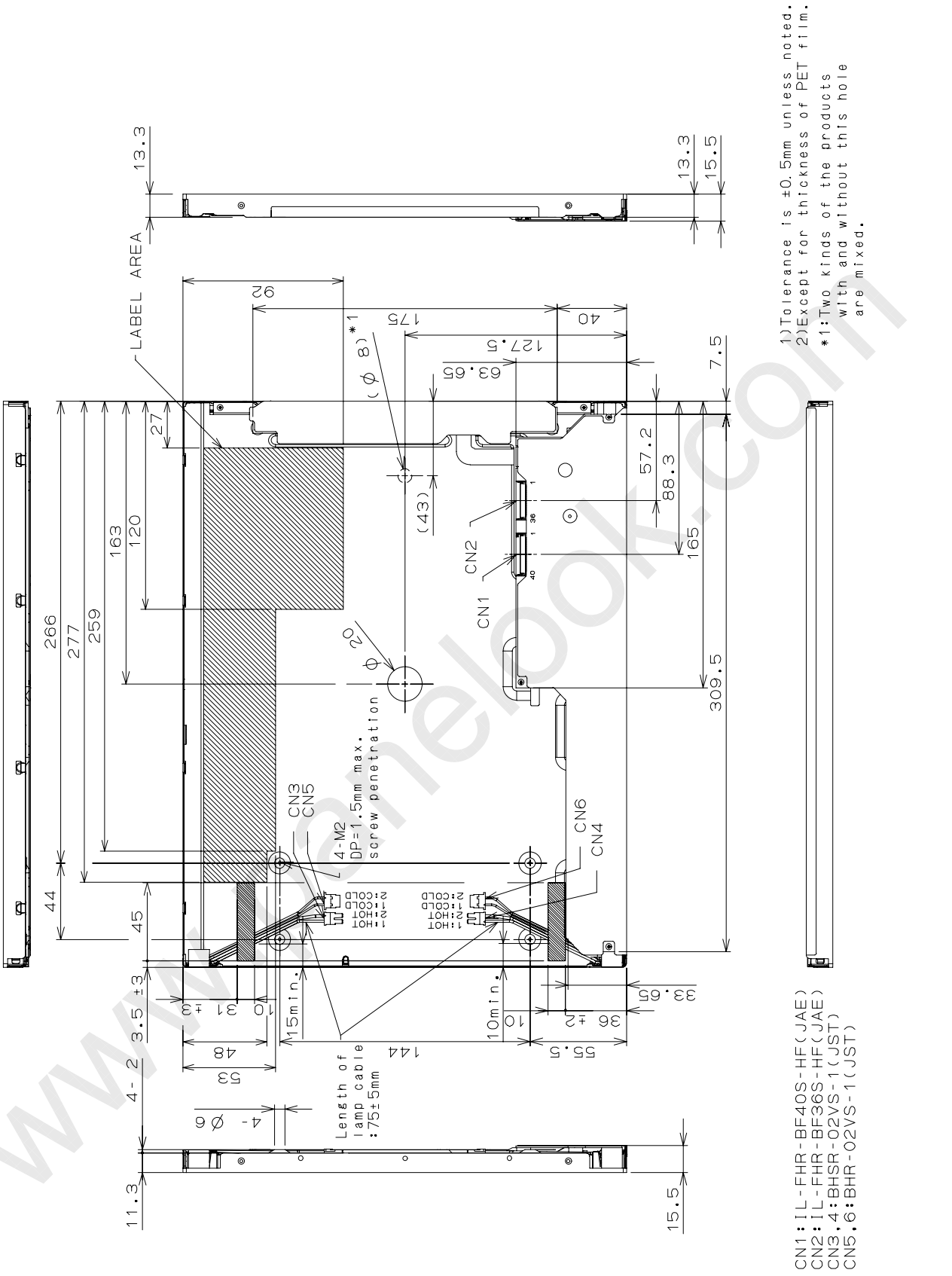

(Unit:mm)

[Note]

We recommend you referring to the detailed drawing for your design.
Please contact our company sales representative when you need the detailed drawing.

One step solution for LCD / PDP / OLED panel application: Datasheet, inventory and accessory! www.panelook.com

Global LCD Panel Exchange Center www.panelook.com 屏库:全球液晶屏交易中心

9. OPTICAL CHARACTERISTICS

Ta = 25°C, VCC = 5.0 V, Input Signals: Typ. Values shown in Section 6

ITEM		SYMBOL	CONDITION	MIN.	TYP.	MAX.	UNIT	Remarks
Contrast Ratio		CR	θ = ϕ = 0°	240	350	--	--	*1)*3)
Luminance	Normal	Lw	θ = ϕ = 0°	280	350	--	cd/m^2	*2)*3)
	Uniformity	ΔLw	θ = ϕ = 0°	--	--	30	%	*2)*3)
Response Time		tr	θ = ϕ = 0°	--	6	--	ms	*3)*4)
		tf	θ = ϕ = 0°	--	19	--	ms	*3)*4)
Viewing Angle	Horizontal	ϕ	CR ≥ 10	--	-85~85	--	°	*3)
	Vertical	θ		--	-80~70	--	°	*3)
	Horizontal	ϕ	CR ≥ 5	--	-85~85	--	°	*3)
	Vertical	θ		--	-85~85	--	°	*3)
Image Sticking		tis	2 h	--	--	2	s	*5)
Color Coordinates	Red	Rx	θ = ϕ = 0°	0.610	0.640	0.670	--	*3)
		Ry		0.305	0.335	0.365		
	Green	Gx		0.247	0.277	0.307		
		Gy		0.560	0.590	0.620		
	Blue	Bx		0.113	0.143	0.173		
		By		0.030	0.060	0.090		
	White	Wx		0.283	0.313	0.343		
		Wy		0.299	0.329	0.359		

[Note]

These items are measured using CS1000(MINOLTA) for color coordinates, EZContrast(ELDIM) for viewing angle and CS1000 or BM-5A(TOPCON) for others under the dark room condition (no ambient light) after more than 30 minutes from turning on the lamp unless noted.

Condition: IL = 6.5 mArms, Inverter frequency: 60 kHz

*1) Definition of Contrast Ratio

CR=ON(White) Luminance / OFF(Black) Luminance: measurement point 5 (center point) shown in a figure below

*2) Definition of Luminance and Luminance Uniformity

Lw=ON (White) Luminance: measurement point 5 (center point) shown in a figure below

ΔLw=[Lw(MAX)/Lw(MIN)-1] × 100

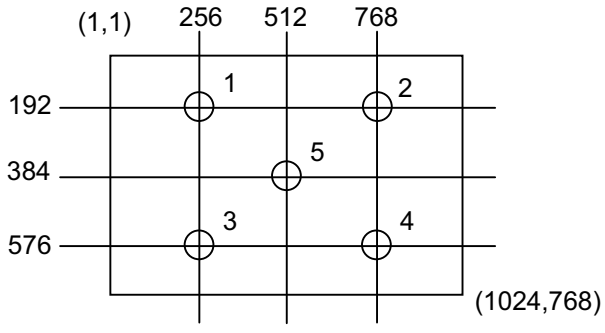

MEASUREMENT POINT

One step solution for LCD / PDP / OLED panel application: Datasheet, inventory and accessory! www.panelook.com

*3) Definition of Viewing Angle(θ , ϕ)

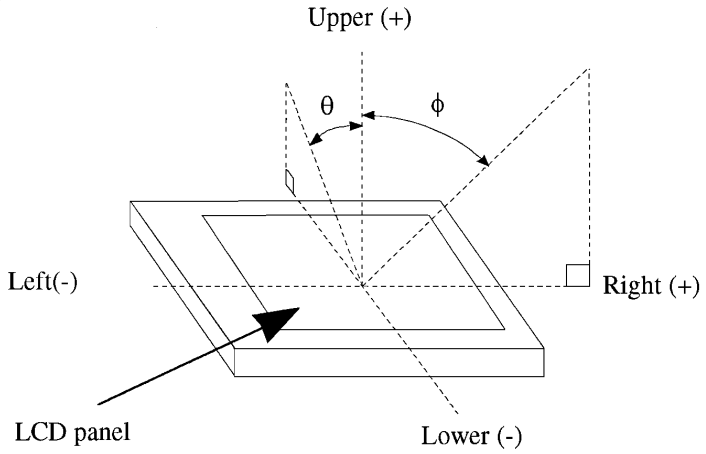

*4) Definition of Response Time

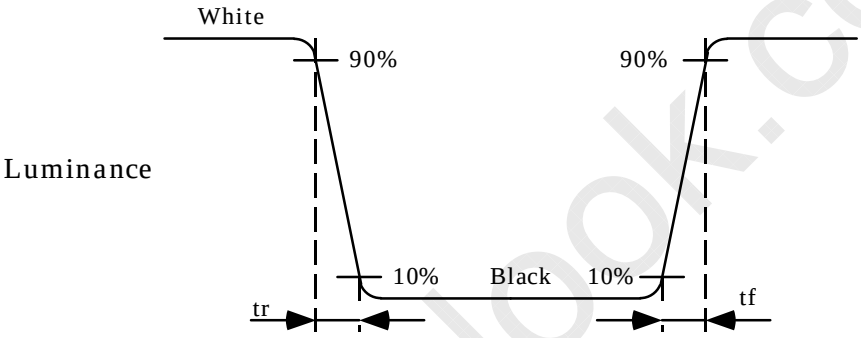

*5) Image Sticking

Continuously display the test pattern shown in the figure below for two-hours. Then display a completely white screen. The previous image shall not persist more than two seconds at 25°C.

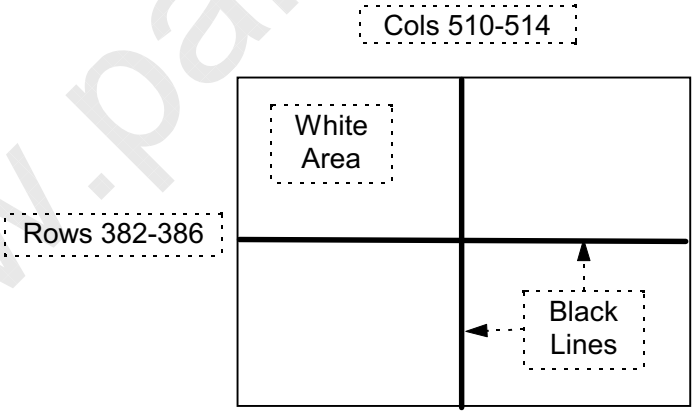

TEST PATTERN FOR IMAGE STICKING TEST

One step solution for LCD / PDP / OLED panel application: Datasheet, inventory and accessory! www.panelook.com

Global LCD Panel Exchange Center www.panelook.com 屏库:全球液晶屏交易中心

10. RELIABILITY TEST CONDITION

(1) Temperature and Humidity

TEST ITEM	CONDITIONS
HIGH TEMPERATURE HIGH HUMIDITY OPERATION	40°C, 90% RH, 240 h (No condensation)
HIGH TEMPERATURE OPERATION	50°C, 240 h
LOW TEMPERATURE OPERATION	0°C, 240 h
THERMAL SHOCK (Non-Operation)	BETWEEN -20°C (1h) and 60°C(1h), 100 CYCLES
HIGH TEMPERATURE STORAGE	60°C, 240 h
LOW TEMPERATURE STORAGE	-20°C, 240 h

(2) Shock & Vibration

ITEM	CONDITIONS
SHOCK (NON-OPERATION)	Shock level: 980 m/s^2 (100 G) Waveform: half sinusoidal wave, 2 ms Number of shocks: one shock input in each direction of three mutually Perpendicular axes for a total of six shock inputs
VIBRATION (NON-OPERATION)	Vibration level: 9.8 m/s^2 (1.0 G)zero to peak Waveform: sinusoidal Frequency range: 5 to 500 Hz Frequency sweep rate: 0.5 octave /min Duration: one sweep from 5 to 500 Hz in each of three mutually perpendicular axis(each x,y,z axis: 1 hour, total 3 hours)

(3) Judgment standard

The judgment of the above tests should be made as follow:

Pass: Normal display image, no damage of the display function. (ex. no line defect)
Partial transformation of the module parts should be ignored.

Fail: No display image, damage of the display function. (ex. line defect)

www.panelook.com

One step solution for LCD / PDP / OLED panel application: Datasheet, inventory and accessory! www.panelook.com

Global LCD Panel Exchange Center www.panelook.com 屏库:全球液晶屏交易中心

11. HANDLING PRECAUTIONS FOR TFT-LCD MODULE

Please pay attention to the followings in handling TFT-LCD products;

(1) ASSEMBLY PRECAUTION

a. Please mount the LCD module by using mounting hole with a screw clamping torque less than 0.5 Nm. Please do not bend or wrench the LCD module in assembling. Please do not drop, bend or twist the LCD module in handling. Please mount the invertor circuit board by using mounting hole of rear side with a screw clamping torque less than 0.2 Nm.

b. Please design display housing in accordance with the following guide lines.

(a) Housing case must be designed carefully so as not to put stresses on LCD all sides and not to wrench module. The stresses may cause non-uniformity even if there is no non-uniformity statically.

(b) Keep sufficient clearance between LCD module back surface and housing when the LCD module is mounted. Approximately 1.0mm of the clearance in the design is recommended taking into account the tolerance of LCD module thickness and mounting structure height on the housing.

(c) When some parts, such as, FPC cable and ferrite plate, are installed underneath the LCD module, still sufficient clearance is required, such as 0.5mm. This clearance is, especially, to be reconsidered when the additional parts are implemented for EMI countermeasure.

(d) Design the inverter location and connector position carefully so as not to give stress to lamp cable, or not to interface the LCD module by the lamp cable.

(e) Keep sufficient clearance between LCD module and the others parts, such as inverter and speaker so as not to interface the LCD module. Approximately 1.0mm of the clearance in the design is recommended.

(f) To avoid local elevation/decrease of temperature, considering location of heating element, heat release, thermal design should be done.

c. Please do not push or scratch LCD panel surface with anything hard. And do not soil LCD panel surface by touching with bare hands. (Polarizer film, surface of LCD panel is easy to be flawed.)

d. Please do not press any parts on the rear side such as source TCP, gate TCP, control circuit board and FPCs during handling LCD module. If pressing rear part is unavoidable, handle the LCD module with care not to damage them.

e. Please wipe off LCD panel surface with absorbent cotton or soft cloth in case of it being soiled.

f. Please wipe off drops of adhesives like saliva and water on LCD panel surface immediately. They might damage to cause panel surface variation and color change.

g. Please do not take a LCD module to pieces and reconstruct it. Resolving and reconstructing modules may cause them not to work well.

h. Please do not touch metal frames with bare hands and soiled gloves. A color change of the metal frames can happen during a long preservation of soiled LCD modules.

One step solution for LCD / PDP / OLED panel application: Datasheet, inventory and accessory! www.panelook.com

Global LCD Panel Exchange Center www.panelook.com 屏库:全球液晶屏交易中心

i. Please pay attention to handling lead wire of backlight so that it is not tugged in connecting with inverter.

j. Please connect the metal frame of LCD module to GND in order to minimize the effect of external noise and EMI.

k. Be sure to connect the cables and the connectors correctly.

(2) OPERATING PRECAUTIONS

a. Please be sure to turn off the power supply before connecting and disconnecting signal input cable.

b. Please do not change variable resistance settings in LCD module. They are adjusted to the most suitable value. If they are changed, it might happen LCD does not satisfy the characteristics specification.

c. LCD backlight takes longer time to become stable of radiation characteristics in low temperature than in room temperature.

d. The interface signal speed is very high. Please pay attention to transmission line design and other high speed signal precautions to satisfy signal specification.

e. A condensation might happen on the surface and inside of LCD module in case of sudden change of ambient temperature.

f. Please pay attention not to display the same pattern for very long time. Image might stick on LCD. Even if image sticking happens, it may disappear as the operation time proceeds.

g. Please obey the same safe instructions as ones being prepared for ordinary electronic products.

(3) PRECAUTIONS WITH ELECTROSTATICS

a. This LCD module use CMOS-IC on circuit board and TFT-LCD panel, and so it is easy to be affected by electrostatics. Please be careful with electrostatics by the way of your body connecting to the ground and so on.

b. Please remove protection film very slowly from the surface of LCD module to prevent from electrostatics occurrence.

(4) STORAGE PRECAUTIONS

a. Please do not leave the LCDs in the environment of high humidity and high temperature such as 60°C90% RH.

b. Please do not leave the LCDs in the environment of low temperature; below -20°C.

(5) SAFETY PRECAUTIONS

a. When you waste damaged or unnecessary LCDs, it is recommended to crush LCDs into pieces and wash them off with solvents such as acetone and ethanol, which should later be burned.

One step solution for LCD / PDP / OLED panel application: Datasheet, inventory and accessory! www.panelook.com

b. If any liquid leaks out of a damaged glass cell and comes in contact with the hands, wash off thoroughly with soap and water.

c. Be sure to turn off the power supply when inserting or disconnecting the cable.

d. Inverter should be designed carefully so as not to keep working in case of detecting over current or open circuit on the lamp.

(6) OTHERS

a. A strong incident light into LCD panel might cause display characteristics changing inferior because of polarizer film, color filter, and other materials becoming inferior. Please do not expose LCD module direct sunlight and strong UV rays.

b. Please pay attention to a panel side of LCD module not to contact with other materials in preserving it alone.

c. For the packaging box, please pay attention to the followings;

(a) Packaging box and inner case for LCD are designed to protect the LCDs from the damage or scratching during transportation. Please do not open except picking LCDs up from the box.

(b) Please do not pile them up more than 5 boxes. (They are not designed so.) And please do not turn over.

(c) Please handle packaging box with care not to give them sudden shock and vibrations. And also please do not throw them up.

(d) Packaging box and inner case for LCDs are made of cardboard. So please pay attention not to get them wet. (Such like keeping them in high humidity or wet place can occur getting them wet.)

www.panelook.com

One step solution for LCD / PDP / OLED panel application: Datasheet, inventory and accessory! www.panelook.com